JUNJIN CONCRETE PUMP
SERVICE INFORMATION

JUNJIN

JSI - EN - 05 - 2A - 001		Date	Feb 1st, 2005
Total Pages	2	Present Page	1
Written by	IL KYU, AN	Approved by	IN JAE, HWANG
Subject	Boom specification of each model		

■ Boom specification

You will find the information of all boom specifications on this service information.

■ Length of each section

(Meter)

model / section	M55	M50	M48	M43	M42	M41	M37	Z37	M33	M28	M20	Remark
1st	11.2	9.5	10.5	11	10.6	9.4	8.7	9.2	8.0	8.9	6.5	
2nd	9.9	9.9	8.7	10.1	9.4	8.6	7.9	7.9	7.0	8.0	4.8	
3rd	9.7	8.8	8.2	9.1	9.2	9.0	8.0	8.1	7.0	7.4	4.9	
4th	10.4	9.3	8.1	8.3	9.0	9.2	8.4	8.0	6.7			
5th	9.8	10.1	8.4									

■ Maximum vertical reach

(Meter)

Model	M55	M50	M48	M43	M42	M41	M37	Z37	M33	M28	M20	Remark
Reach	55	49.5	47.9	42.5	42.2	40.2	37	37.2	32.7	28.3	20.2	

※ Outriggers are fully extended.

■ Maximum horizontal reach

(Meter)

Model	M55	M50	M48	M43	M42	M41	M37	Z37	M33	M28	M20	Remark
Reach	51	45.5	43.9	38.5	38.2	36.2	33	33.2	28.7	24.3	16.2	

■ Working angle of each section

단위 : 도

model / section	M55	M50	M48	M43	M42	M41	M37	Z37	M33	M28	M20	Remark
1st	90	92	92	106	99	90	90	90	90	110	90	
2nd	180	180	180	180	180	180	180	180	180	180	180	
3rd	180	180	180	180	180	180	180	180	180	255	270	
4th	220	220	180	255	245	260	245	245	260			
5th	270	270	255									
Swing	365	365	365	365	365	365	365	365	365	365	365	

JUNJIN HEAVY INDUSTRY SERVICE DEPARTMENT 428-1 Doosung-ri Maengdong-Myun Eumsung-Gun Chungbuk, Korea
Tel : (+82)43 877-3023 Fax : (+82)43 882-3023 E-MAIL : AS@JUNJINCONCRETEPUMPS.COM
© COPYRIGHT 2005 JUNJIN HEAVY INDUSTRY CO., LTD. ALL RIGHTS RESERVED

JUNJIN CONCRETE PUMP
SERVICE INFORMATION

JSI - EN - 05 - 2A - 001		Date	Feb 1st, 2005
Total Pages	2	Present Page	2
Written by	IL KYU, AN	Approved by	IN JAE, HWANG
Subject	Boom specification of each model		

■ Required height for unfolding boom

(Meter)

Model	M55	M50	M48	M43	M42	M41	M37	Z37	M33	M28	M20	Remark
Height	11.2	9.5	9.3	11	10.2	9.3	8.5	8.6	7.7	8.5	5.2	

■ Weight test

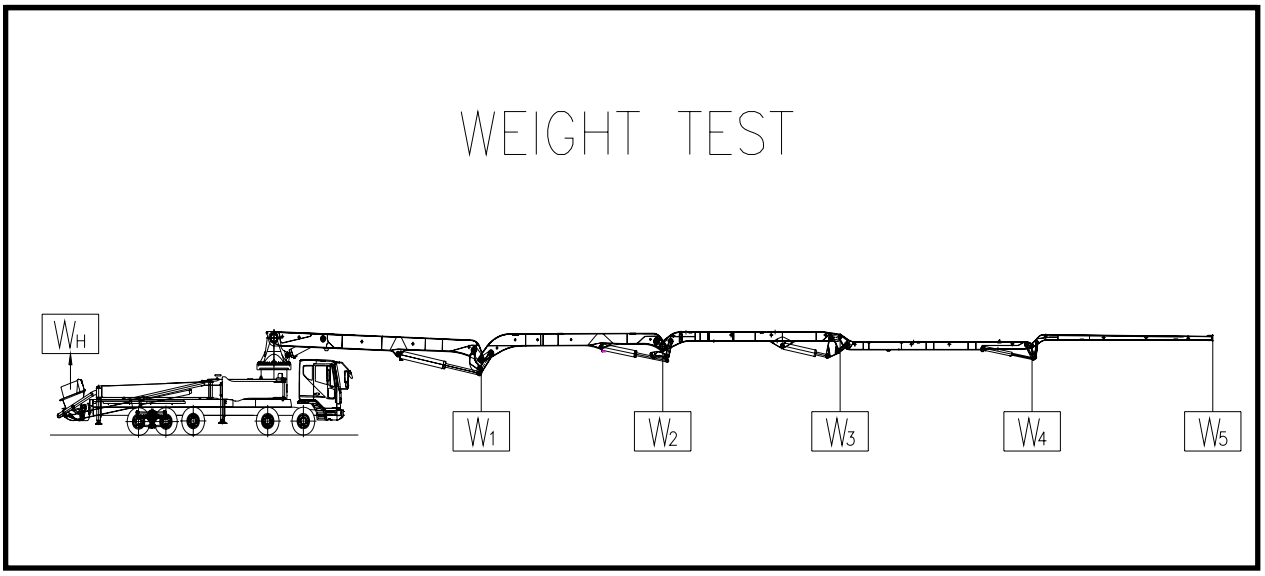

■ Required weight for each section

(KG)

Model / Boom	M55	M50	M48	M43	M42	M41	M37	Z37	M33	M28	M20	Remark
1st	350	300	300	350	300	300	300	300	300			
2nd	350	255	255	300	250	300	250	250	250			
3rd	300	300	300	300	300	250	250	250	200			
4th	320	300	300	250	250	250	250	250	250			
5th	300	255	255									
Hopper	300											

JUNJIN HEAVY INDUSTRY SERVICE DEPARTMENT 428-1 Doosung-ri Maengdong-Myun Eumsung-Gun Chungbuk, Korea
Tel : (+82)43 877-3023 Fax : (+82)43 882-3023 E-MAIL : AS@JUNJINCONCRETEPUMPS.COM
© COPYRIGHT 2005 JUNJIN HEAVY INDUSTRY CO., LTD. ALL RIGHTS RESERVED

JUNJIN CONCRETE PUMP
SERVICE INFORMATION

JSI - EN - 05 - 2A - 033		Date	Feb 1st, 2005
Total Pages	7	Present Page	1
Written by	IL KYU, AN	Approved by	IN JAE, HWANG
Subject	M33 boom structure		

■ M33 1st boom

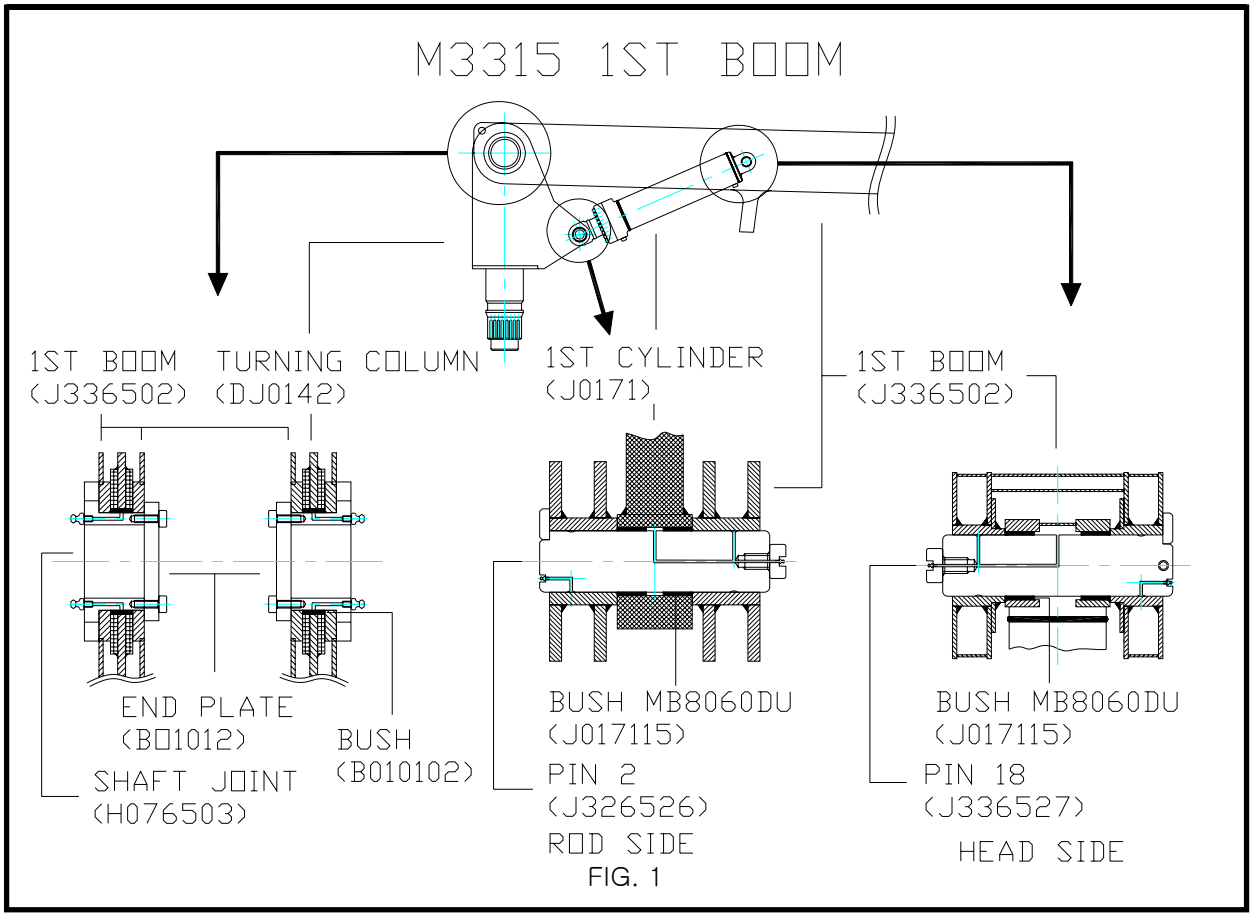

FIG. 1

■ Remark

① 1st boom cylinder = ϕ225 X ϕ125 X ST982

② PIN 2 = ϕ80 X 466

③ PIN 18 = ϕ80 X 534

④ BUSH(B010102) = ϕ290 X ϕ270 X 45

JUNJIN HEAVY INDUSTRY SERVICE DEPARTMENT 428-1 Doosung-ri Maengdong-Myun Eumsung-Gun Chungbuk, Korea
Tel : (+82)43 877-3023 Fax : (+82)43 882-3023 E-MAIL : AS@JUNJINCONCRETEPUMPS.COM
© COPYRIGHT 2005 JUNJIN HEAVY INDUSTRY CO., LTD. ALL RIGHTS RESERVED

■ M33 1st link

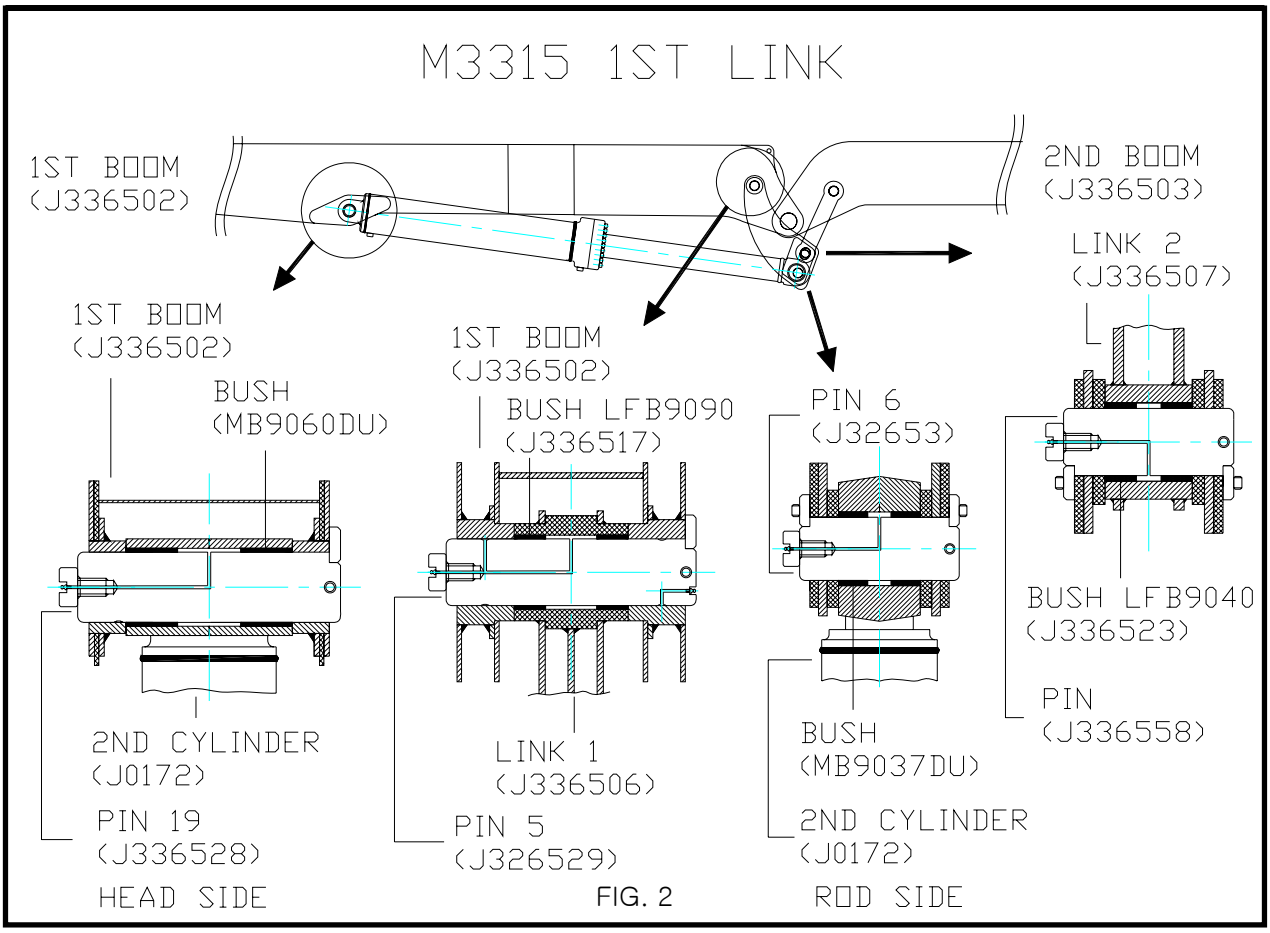

FIG. 2

■ Remark

① 2nd cylinder = ϕ180 X ϕ120 X ST1233

② PIN 19 = ϕ90 X 382

③ PIN 5 = ϕ90 X 421

④ PIN 6 = ϕ90 X 196

⑤ PIN = ϕ70 X 170

JUNJIN HEAVY INDUSTRY SERVICE DEPARTMENT 428-1 Doosung-ri Maengdong-Myun Eumsung-Gun Chungbuk, Korea

Tel : (+82)43 877-3023 Fax : (+82)43 882-3023 E-MAIL : AS@JUNJINCONCRETEPUMPS.COM

© COPYRIGHT 2005 JUNJIN HEAVY INDUSTRY CO., LTD. ALL RIGHTS RESERVED

■ M33 2nd boom

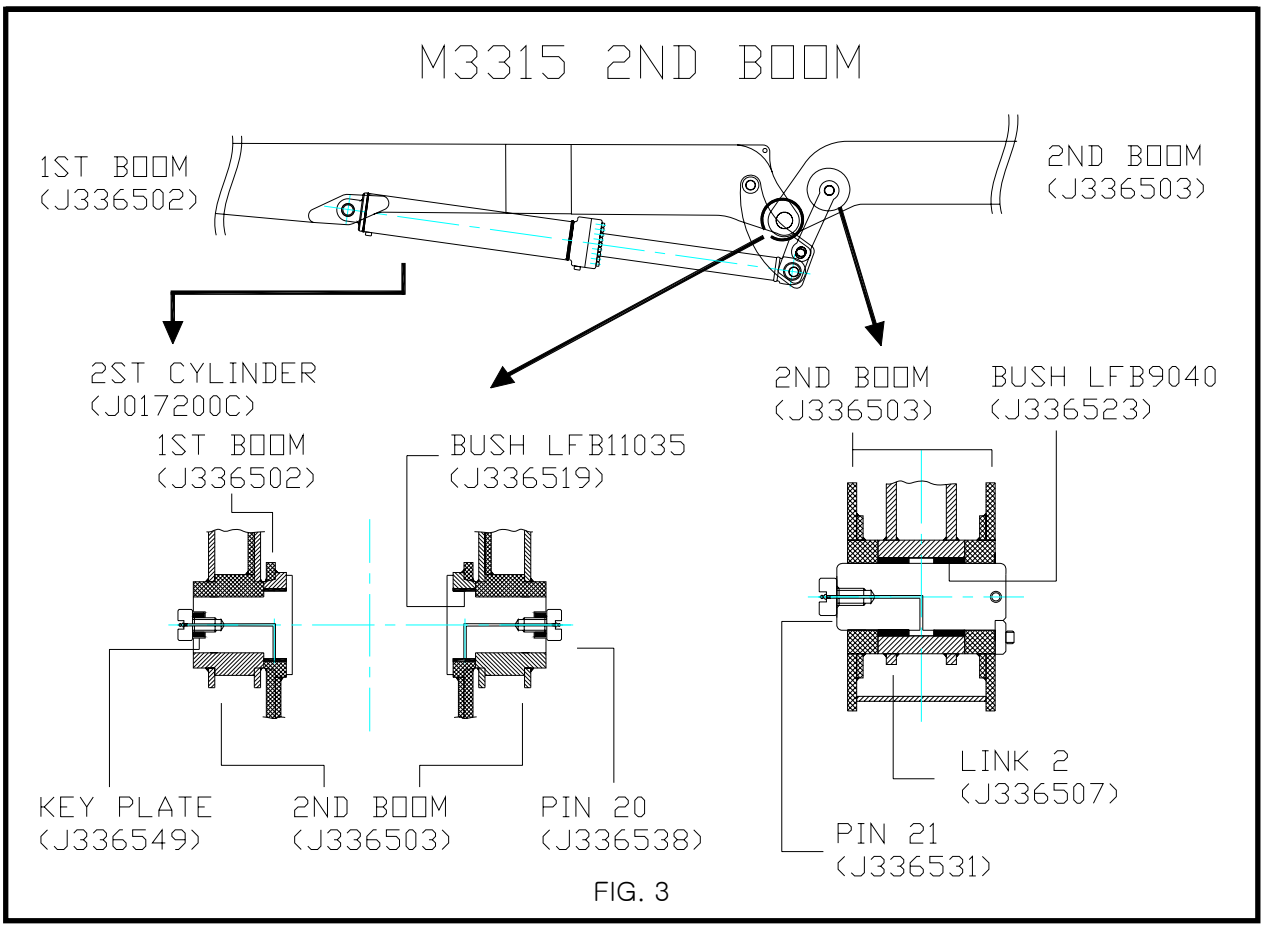

FIG. 3

■ Remark

① 2nd cylinder = ϕ180 X ϕ120 X ST1233

② PIN 21 = ϕ90 X 280

JUNJIN HEAVY INDUSTRY SERVICE DEPARTMENT 428-1 Doosung-ri Maengdong-Myun Eumsung-Gun Chungbuk, Korea

Tel : (+82)43 877-3023 Fax : (+82)43 882-3023 E-MAIL : AS@JUNJINCONCRETEPUMPS.COM

© COPYRIGHT 2005 JUNJIN HEAVY INDUSTRY CO., LTD. ALL RIGHTS RESERVED

■ M33 2nd link

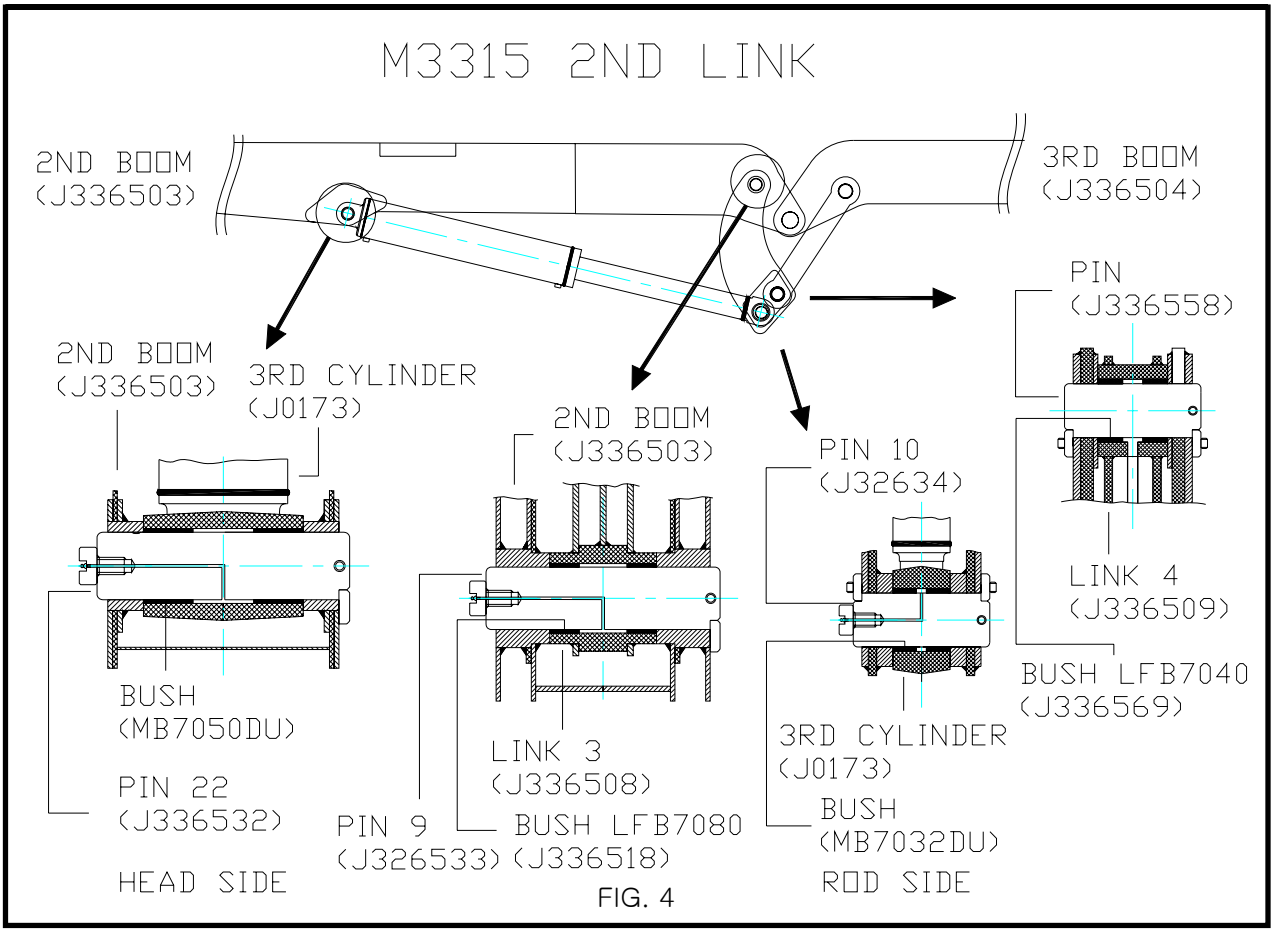

FIG. 4

■ Remark

① 3rd cylinder = ϕ140 X ϕ80 X ST1060

② PIN 9 = ϕ70 X 377

③ PIN 22 = ϕ70 X 292

JUNJIN HEAVY INDUSTRY SERVICE DEPARTMENT 428-1 Doosung-ri Maengdong-Myun Eumsung-Gun Chungbuk, Korea

Tel : (+82)43 877-3023 Fax : (+82)43 882-3023 E-MAIL : AS@JUNJINCONCRETEPUMPS.COM

© COPYRIGHT 2005 JUNJIN HEAVY INDUSTRY CO., LTD. ALL RIGHTS RESERVED

■ M33 3rd boom

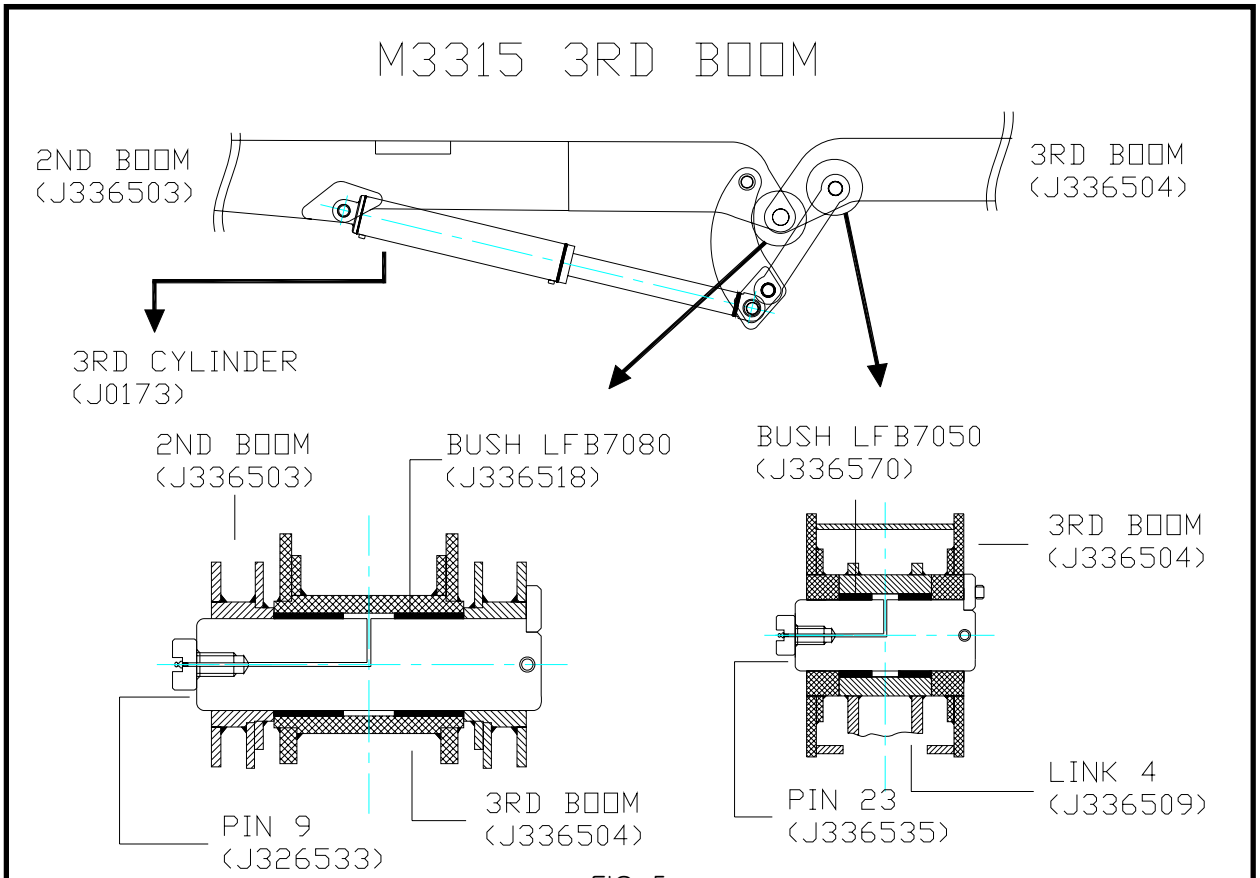

FIG. 5

■ Remark

① 3rd cylinder = ϕ140 X ϕ80 X ST1060

② PIN 9 = ϕ70 X 377

③ PIN 23 = ϕ70 X 235

JUNJIN HEAVY INDUSTRY SERVICE DEPARTMENT 428-1 Doosung-ri Maengdong-Myun Eumsung-Gun Chungbuk, Korea

Tel : (+82)43 877-3023 Fax : (+82)43 882-3023 E-MAIL : AS@JUNJINCONCRETEPUMPS.COM

© COPYRIGHT 2005 JUNJIN HEAVY INDUSTRY CO., LTD. ALL RIGHTS RESERVED

■ M33 3rd link

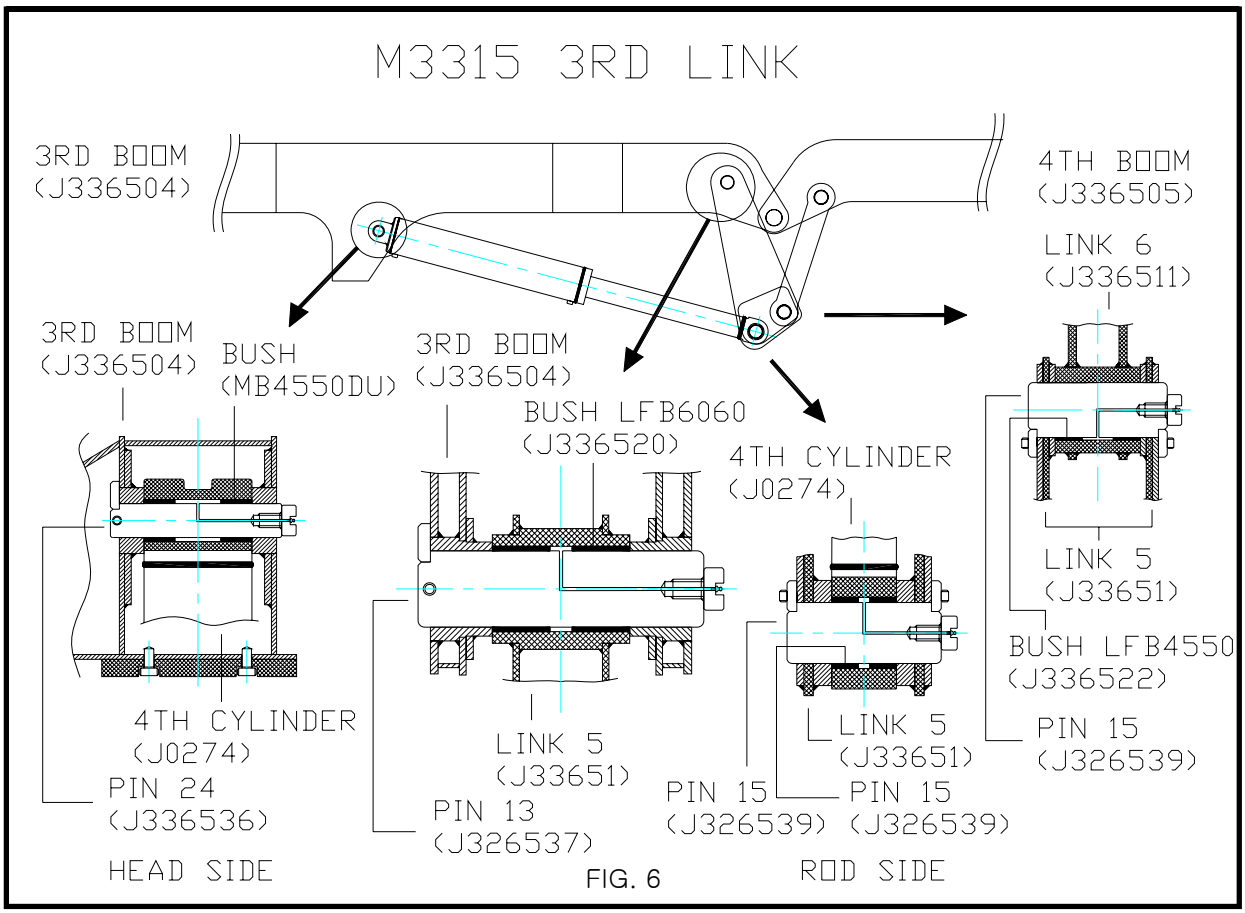

FIG. 6

■ Remark

① 4th cylinder = ϕ125 X ϕ80 X ST832.5

② PIN 24 = ϕ45 X 224

③ PIN 13 = ϕ60 X 357

④ PIN 15 = ϕ45 X 160

JUNJIN HEAVY INDUSTRY SERVICE DEPARTMENT 428-1 Doosung-ri Maengdong-Myun Eumsung-Gun Chungbuk, Korea

Tel : (+82)43 877-3023 Fax : (+82)43 882-3023 E-MAIL : AS@JUNJINCONCRETEPUMPS.COM

© COPYRIGHT 2005 JUNJIN HEAVY INDUSTRY CO., LTD. ALL RIGHTS RESERVED

■ M33 4th boom

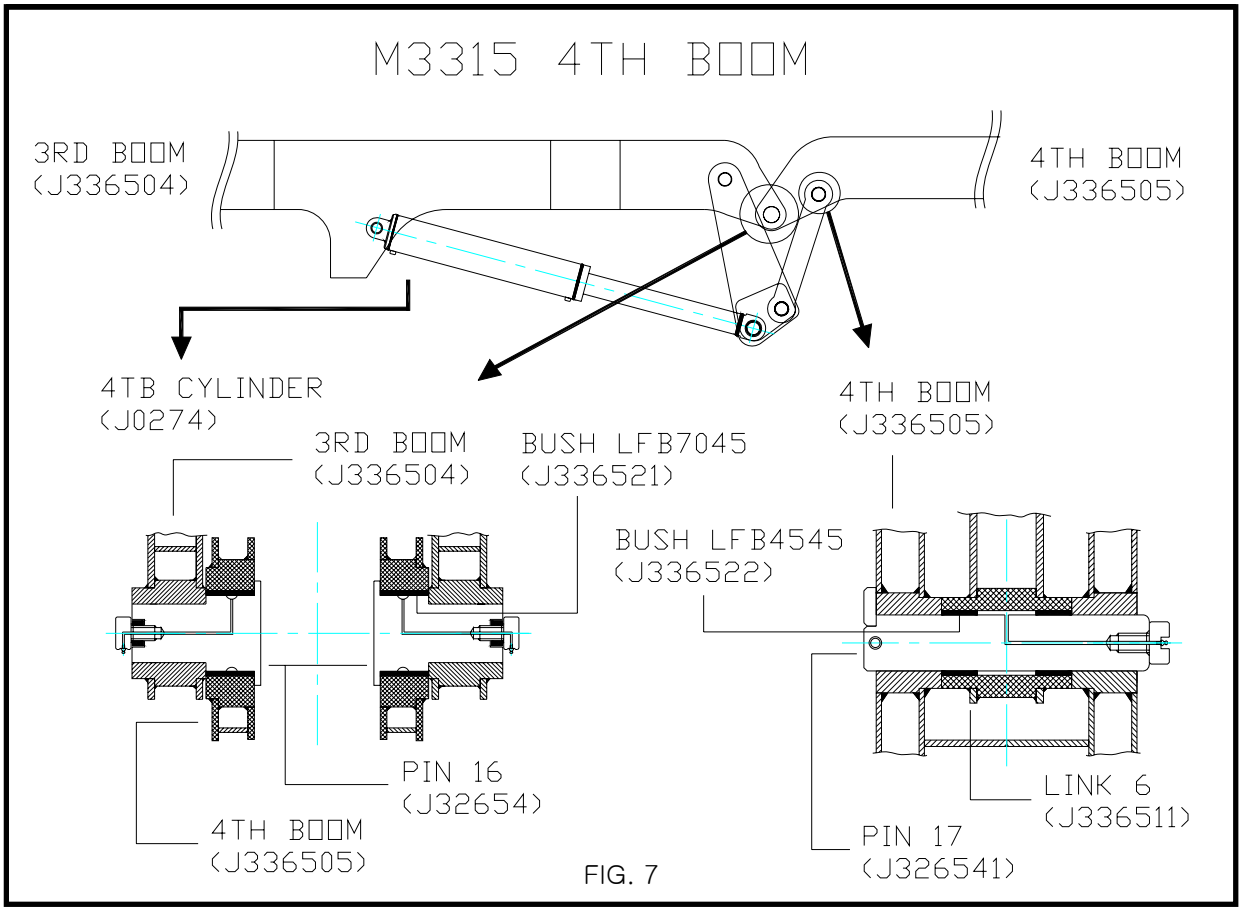

FIG. 7

■ Remark

① 4th cylinder = ϕ125 X ϕ80 X ST832.5

② PIN 16 = ϕ45 X 224

③ PIN 17 = ϕ45 X 233

JUNJIN HEAVY INDUSTRY SERVICE DEPARTMENT 428-1 Doosung-ri Maengdong-Myun Eumsung-Gun Chungbuk, Korea

Tel : (+82)43 877-3023 Fax : (+82)43 882-3023 E-MAIL : AS@JUNJINCONCRETEPUMPS.COM

© COPYRIGHT 2005 JUNJIN HEAVY INDUSTRY CO., LTD. ALL RIGHTS RESERVED